REVISIONS			
LTR	DESCRIPTION	DATE	APPROVED
	REPLACES WITH CHANGE DWG C6019024		
	REV B, SEE EO NO. SA27999		VW Grant
A	(5) SEE ERR HQR 30687-1	23 MAY 73	E. Winter
B	SEE ERR HQR 50605	10 FEB 75	[illegible]
C	NOR W8S8004 78-12-20	79-05-08	[illegible]
D	NOR W3S2037/83-09-13	83-10-21	[illegible]
E	NOR.W6S2076/870211	881102	[illegible]

NOTES:

1. FINISH 125√ ALL OVER. (B)
2. ALL EDGES SHALL BE BROKEN .005+.010 UNLESS OTHERWISE SPECIFIED.
3. MATERIAL:
   A. STEEL, CMPSN 1040 THRU 1080 ASTM-A575, A576 OR ASTM A108.
   B. INVESTMENT CASTING IC4140, SPEC MIL-S-22141.
4. HEAT TREATMENT:
   A. STEEL, CMPSN 1040 THRU 1080, ASTM-A575, A576 OR ASTM A108. AUSTEMPER ALTERNATE: HEAT AT 1450° TO 1500°F, OIL QUENCH. TEMPER 20 MINUTES AT HEAT TO HARDNESS SPECIFIED. HEAT TREATMENT METHOD IS FOR GUIDANCE EXCEPT THAT TEMPERING TIME SHALL NOT BE REDUCED. (A)
   B. INVESTMENT CASTING IC4140, AUSTEMPER ALTERNATE: HEAT AT 1500° TO 1550°F OIL QUENCH TEMPER FOR 1 HOUR TO HARDNESS SPECIFIED. (A)
5. FINISH 5.3.1.2 OF MIL-STD-171.
6. MIL-W-13855 APPLIES. (A)
7. INSPECTION:
   A. IC4140 CLASS 2 GRADE B MIL-STD-2175.

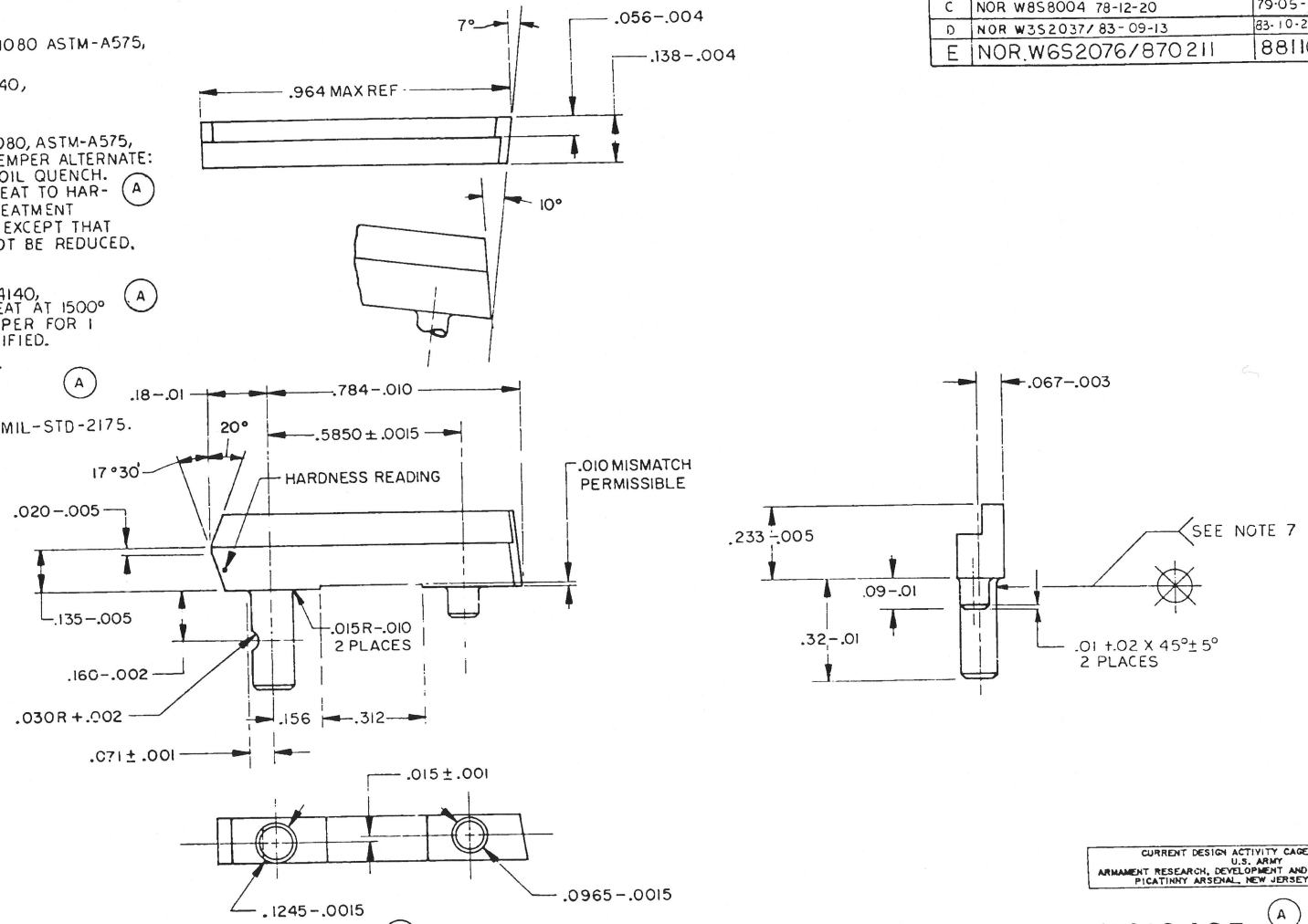

(A)

CURRENT DESIGN ACTIVITY CAGE CODE 19200
U.S. ARMY
ARMAMENT RESEARCH, DEVELOPMENT AND ENGINEERING CENTER
PICATINNY ARSENAL, NEW JERSEY 07806-5000

PART NO. 11010485 (A)

MECHANICAL PROPERTIES		B12006342	PISTOL, M15
YP			
TS			
EL 2		D6508389	PISTOL, M911A1
RA			
BH		NEXT ASSY	USED ON
RH	C33 T038	APPLICATION	
		APPLY PART NO.	

UNLESS OTHERWISE SPECIFIED DIMENSIONS ARE IN INCHES
TOLERANCES ON FRACTIONS ± DECIMALS ± .010 ANGLES ± 1°

MATERIAL: SEE NOTE 3

HEAT TREATMENT: SEE NOTE 4

FINAL PROTECTIVE FINISH: SEE NOTE 5

ORIGINAL DATE OF DRAWING: 23 MAR 65

DRAFTSMAN: N.E.W. CHECKER:
TRACER: bew CHECKER: HES
ENGINEER: H.E. Sibley ENGINEER:
SUBMITTED: V W Grant
APPROVED: VA Leukhonen

SPRINGFIELD ARMORY, SPRINGFIELD 1, MASS.

EJECTOR (A)

DWG SIZE	CODE IDENT NO.	
C	19205	11010485
SCALE 4/1	UNIT WT	SHEET 1 OF 1

DUPLICATE ORIGINAL

SWESP FORM NO. 1177-3
20 MAR 64 REV.

REVISIONS					
MF	ZONE	LTR	DESCRIPTION	DATE	APPROVED
		A	SEE ERR HQR 30687-1	23 MAY 73	E.A. Winter

NOTES:

1. THE DETAIL ON THE FACE OF THE MEDALLION SHALL BE IN ACCORDANCE WITH US ARMY PHOTOGRAPH 11-070-343-1354/AMC 72 DATED 13 NOV 72, ROCK ISLAND ARSENAL, ROCK ISLAND, ILL.
2. MATERIAL:
   MEDALLION: SILVER, GRADE B OR C PER MIL-S-13282
   TUBE: BRASS, APPROX 1/4 HARD
3. FINISH:
   MEDALLION: OXIDIZED RELIEVED SATIN FINISH
   TUBE: NONE
4. REFERENCE INFORMATION:
   A GOVERNMENT DIE MAY BE AVAILABLE.

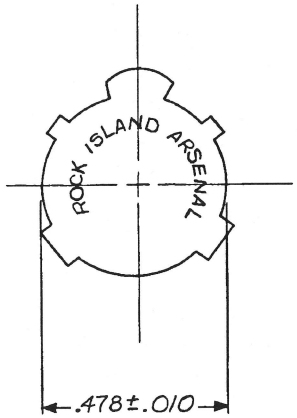

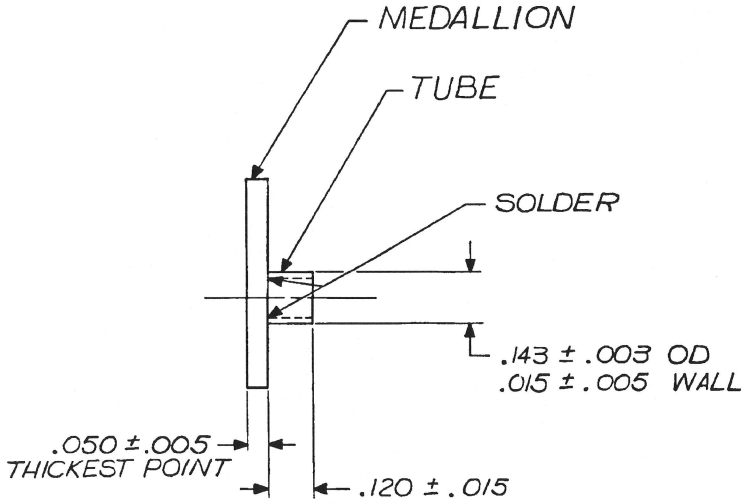

C/12006305

Ⓐ

PART NO. 12006305

MECHANICAL PROPERTIES	
YS MIN	
YS MAX	
EL 2	
RA	
BH	
RH	

	PISTOL, CAL. 45 AUTO, GEN OFFICER; M15
B12006329	
NEXT ASSY	USED ON
APPLICATION	

UNLESS OTHERWISE SPECIFIED DIMENSIONS ARE IN INCHES
TOLERANCES:
ANGLES ±
3 PLACE DECIMALS ±
2 PLACE DECIMALS ±

MATERIAL: SEE NOTE 2

FINAL PROTECTIVE FINISH: SEE NOTE 3

CONTRACT NO:

DATE 30 NOV 72

PREPARED	A. Handley
CHECKED	R. Boos
ENGINEER	E.A. Winter
SUBMITTED	A. A. Cole
APPROVED	R. S. Henry

DEPT OF THE ARMY
U.S. ARMY WEAPONS COMMAND
ROCK ISLAND, ILLINOIS, 61201

MEDALLION, R/A

SIZE	CODE IDENT NO.	DRAWING NO.
C	19204	12006305

SCALE 4/1 SHEET 1 OF 1

AMSWE Form 4036, 13 Nov 70

EDITION OF 20 JUL 69 MAY BE USED